AI-DRIVEN BEHAVIORAL AND MOTION BASED CONTROL OF ELECTRICAL APPLIANCES FOR PHYSICALLY CHALLENGED INDIVIDUALS

Hariharasudhan T*
Electrical and Electronics Engineering
M. Kumarasamy College of Engineering.
Karur, TamilNadu
thhsudhan@gmail.com

Kalaivani K*
Computer Science and Business System
M. Kumarasamy College of Engineering.
Karur, TamilNadu
kalaivanik.csbs@mkce.ac.in

Santhosh S
Electrical and Electronics Engineering
M. Kumarasamy College of Engineering.
Karur, TamilNadu
santhoshsurendran2004@gmail.com

Sree Raksha K A
Electrical and Electronics Engineering
M. Kumarasamy College of Engineering.
Karur, TamilNadu
ayyappansree2510@gmail.com

Madhan M
Computer Science and Business System
M. Kumarasamy College of Engineering.
Karur, TamilNadu
madhanm0704@gmail.com

Naveenkumar S
Computer Science and Business System
M. Kumarasamy College of Engineering.
Karur, TamilNadu
s.naveenkumar4181@gmail.com

ABSTRACT— The goal of this project aims to develop a smart system that uses behavior and motion in order to regulate electrical appliances in a home. It is intended to make life easier for people with physical disabilities. The system uses sensors that don't need to be touched, like Passive Infrared (PIR) sensors, ultrasonic sensors, and Inertial Measurement Units (IMUs), to see movement and gestures. Then, computer programs analyze the sensor data in real-time to figure out what the person wants to do. For example, it can turn on lights, fans, or air conditioners using special switches called relay modules. The system processes data on the spot, which means it responds quickly and works even if the internet is down. By being able to adapt to how someone acts and what's happening in the environment, the system makes things more accessible and helps people be more independent. It also saves energy by only using appliances when needed. This helps create a smart home that's both convenient and sustainable.

Keywords: Artificial Intelligence, Internet of Things, Motion Detection, Smart Control, Energy Efficiency.

I. INTRODUCTION

Technology is changing fast, and now we have Artificial Intelligence (AI) and the Internet of Things (IoT). These have made it possible to create systems that can watch, understand, and control appliances based on how people act. This is really helpful for people with physical disabilities because it can be hard for to use regular electrical devices like lights, fans, and other home appliances. This project, AI-Driven Behavioral and Motion-Based Control of Electrical Appliances for Physically Challenged Individuals, is all about making a smart system that uses movement to control things. The goal is to give people more access, independence, and comfort in their own homes. The system uses AI programs and sensors like PIR, ultrasonic, and IMUs to see gestures and patterns in how people move. The information collected by the sensors is used by Machine Learning (ML) and Deep Learning (DL) to figure out what movements mean and then automatically control appliances. The system processes data locally to make sure it responds fast, doesn't have delays, and keeps personal information private. It also has smart energy-saving features that use less power by the predicting when things will be needed. By putting together behavior recognition, motion sensing, and smart automation, this project creates a way for people with physical disabilities to do everyday tasks without spending too much money. It also helps save energy, which is good for the environment.

II. LITERATURE REVIEW

Recent advances in AI and IoT have changed automation, making it possible to monitor and control electrical appliances in a smart way. This is especially good for people with physical disabilities. IoT sensor networks give real-time information about what people are doing, how appliances are being used, and what the environment is like. AI programs use this information to create systems that can adapt and respond to what's happening [1][2]. AI and IoT are combined, appliances can be controlled in a way that saves energy and reduces human effort [2][3]. Machine Learning (ML) and Deep Learning (DL) models learn how people behave, guess what going to do, and change appliance settings automatically, making things more comfortable and accessible [4][5]. In assistive technology, sensors like PIR, ultrasonic, radar, and IMUs capture movement or gestures. This lets people with physical disabilities control lights, fans, and other appliances by moving their hands or heads, without needing to use switches or voice commands [6][7][8]. Computer vision and pattern recognition are also being used to recognize gestures and track behavior, which makes it easier to interact with the system [9][10]. Edge computing and embedded AI make these systems even better by allowing to make decisions in real-time, right on the device. This reduces delays and protects user privacy by not sending too much data to the cloud [2][11]. Recent studies are also looking at using multiple sensors together to combine motion, environmental, and contextual data. This improves how well the system recognizes things, even when lighting or environmental conditions change [1][12]. Even with these improvements, there are still challenges. For example, we need models that can adapt to different or limited motion patterns. AI programs can also require a lot of computing power, and we need hardware that's cheap and doesn't use much power so it can run all the time. We also need to make sure data is private, the system is reliable, and it can be personalized for different users [3][13].

This project aims to address these issues by creating an AI-IoT system that learns how people behave, recognizes motion in real-time, and predicts what people will do. This makes it easier for people with physical disabilities to use appliances. This kind of system helps people be more independent and have a better quality of life. It also helps save energy by controlling power usage based on what the user is doing and what's happening in the environment [2][8].

III. BLOCKDIAGRAM

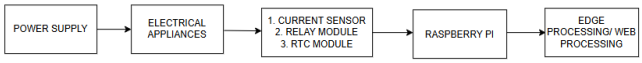

Fig.1.Proposed Model

Fig.2. Flowchart

IV. EXISITING SYSTEM

Modern automation and assistive technologies have come a long way with IoT and AI. But still, current systems have problems with being adaptable, accessible, and responding in real-time, especially for people with physical disabilities. Smart systems today focus on making things convenient and saving energy, but not so much on personalized assistance or using gestures to control things.

A. Conventional Home Automation Systems

Typical home automation systems are operated through switches, remote controls, or apps on phones to control appliances. It needs some kind of physical interaction or visual access, which is a problem for people with physical disabilities. Some systems use Wi-Fi or Bluetooth for wireless control, but only do basic things like turning devices on and off. Can't have sensors or analyze behavior, which makes the automation less helpful.

B. Voice and Gesture Recognition-Based Control

Newer systems are using voice and gesture recognition to let people control things without using their hands. Voice-based systems utilize virtual assistants for understanding spoken commands, whereas gesture-based systems use cameras or motion sensors to see how people move. However, these can be interfered with by background noise, lighting, or if someone cannot make clear gestures. If the conditions are not perfect, the system may not work well for individuals who have limited motion or speech.

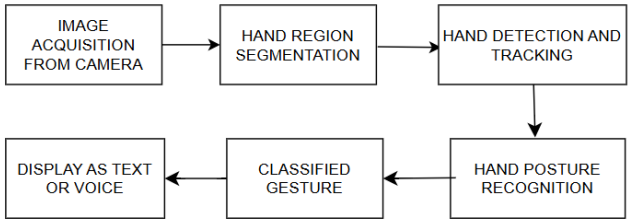

Fig.3.Gesture Recognition

C. Sensor-Triggered Automation Systems

Some automation systems use sensors like PIR, ultrasonic, or capacitive sensors that detect the movement or presence of someone and then actuate appliances accordingly. Such systems operate on predefined rules for appliance switching on/off in response to events. Effective in energy saving but completely fail to learn human behavior and/or situational awareness. The system cannot identify who is using it, let alone what he/she intends to do; it is quite rigid and not comfortable.

D. IoT-Based Control Platforms

IoT platforms knit together smart devices with the ability to be controlled from a single location. That will use smart hubs and mobile applications for scheduling, creating scenes, and remotely controlling appliances, among other functions. But most rule-based platforms don't learn or adapt on their own; systems can't change due to what's happening, and won't do much in the way of benefitting people with disabilities either. Lack of AI makes these installations less than ideal for those with physical impairments.

V. PROPOSED SYSTEM

A. System Architecture and Hardware Configuration

The system includes a smart control unit with a microcontroller like Raspberry Pi or ESP32. This system possesses sensors and communication parts that provide real-time monitoring and automation. The current sensor would help in detecting the amount of energy that appliances use, while the motion sensor would detect any moving subject. The data are communicated to the control unit through respective connections. It includes an RTC that would provide correct time so that the system can accurately schedule events. The entire system is designed and tested on a program called Proteus 8 Design Suite, which allows us to see how the parts will connect and communicate before building it in real life. It helps to ensure the proper working of control and sensing.

B. Data Logging and Behavioural Dataset Formation

The sensor readings from the motion detector, current sensor, and RTC are recorded in CSV format. Each file entry includes, but is not limited to, the following information: the exact time it occurred, if there was motion detected or not, amount of current flow, and whether the appliance is turned on or off. The CSV file now serves as a daily record for usage of appliances. This information is fed into an AI program that calculates when appliances are predominantly used and for how long. Over time, the system learns and predicts what and when things might be needed from the collected data, which also provides the capability to find anomalies.

C. AI-Based Predictive Control and Time Server Algorithm

The AI program studies the saved data in determining how each person uses appliances. The time server algorithm changes the appliance schedules based on what it learns about active times of people and changing environmental conditions. Using the history that the program has drawn from the data of the CSV file, it predicts when appliances will be turned on and updates the RTC's schedule. Every day, the system adjusts the schedule to reflect the newest behavior in order to adapt to changes in daily routines. The program uses what it acquires from the sensors to refresh the models of behaviors. This means that the automation is more efficient and the appliances get used at the appropriate time.

D. Real-Time Decision Layer and Adaptive Operation

The real-time decision layer is the brain of the system . It compares the current sensor reading to the predicted behavior data. When the system detects motion, it determines whether it matches the anticipated pattern, and whether an appliance should be turned on or off, based on that detection. The RTC makes sure such actions occur at appropriate times according to the updated schedule. It checks for deviations between the predicted and the actual behavior; if any are present, the AI program will self-adjust and update its data for future predictions. Real-time sensing and continuous learning, with predictive scheduling, come together in this system to provide a smart and adaptive. The monitoring that goes on currently assures safety, while motion detection brings situational awareness, hence efficient and smart control of appliances becomes accessible.

E. AI-Driven Real-Time Monitoring and Control

The AI-based usage of the system, based on ML-DL, operates different programs automatically in real time. These study how electrical appliances are used according to what the user decides, what the environment is, and what time of day it is.

F. Predictive Energy Management

By learning user and environmental behavior, the system predicts when an appliance is going to be needed. In cases when the system believes a particular appliance will be in use soon, it changes the settings to save energy prior to it actually being turned on. This reduces energy waste, saving money and being better for the environment.

VI. PREDICTION MODEL OVERVIEW

The prediction model gives a detailed explanations of the main elements of the prediction model, including the duration-based prediction for the "OFF" state, the preprocessing procedures, and the details of the Multiple Linear Regression model.

1.Data Preprocessing and Feature Engineering

The first step was to convert the unstructured sequential time-stamped data into a format that could be used for time-series forecasting. There were two crucial steps in this process:

A. Normalization of Time

The precise date is less significant than the time in relation to a daily cycle since the objective is to predict the time of day. Conversion to Minutes Since Midnight: Every 'ON' timestamp was transformed into a continuous numerical variable that showed how many minutes had passed since that day's 00:00:00. As a result, the output might be treated as a standard continuous value by the Linear Regression model.

Time in Minutes = Hour × 60 + Minute + 60 Seconds

For instance, a timestamp of 06:32:18 equals (6×60) + 32 + (18/ 60) = 392.30 minutes.

B. Daily Aggregation (Creation of Lagged Features)

To determine the time-series link, the data was transformed from a lengthy list of events into a broad, daily style.

Daily Vector: ON_Time_1, ON_Time_2, and ON_Time_3 were the three constant "ON" timings for each day, represented by a single row.

Lagged Features: Lagged features were developed in order to implement the three-day lookback window. The three 'ON' timings from t−1, t−2, and t−3 made up the features (X) for any given prediction day t (the target), yielding a total of nine characteristics for each prediction. This is the fundamental idea behind converting a time-series problem into a supervised learning challenge.

2. Multiple Linear Regression for Predicting "ON" Time

Because of its interpretability and efficiency in simulating li near connections between several inputs and a continuous o utput, Multiple Linear Regression (MLR) was selected.

A. Model Architecture and Purpose:

To forecast the exact time (in minutes since midnight) for ea ch of the three daily "ON" events on the next day (t).

Architecture: Because the variables affecting the morning ac tivation time (ON_Time_1) can be different from those affe cting the noon activation (ON_Time_2), three separate MLR models were trained.

MLR j: ON_Time j t = β 0 (j) + i=1 ÷ 3
k=1 → 3 β i,k (j) ·ON_Time k t−i

Coefficients (β values): The coefficients we got from training show how much each past 'ON' time affects today's activation. For example, if ON_Time_1_{t−1} has a high coefficient, it means that what happened yesterday morning is a good clue for what will happen this morning. B. How We Trained and Predicted Training: We trained the models with the historical data we had. We used the first three days to set up the features, and then used the fourth day as our first target. Prediction: To guess the 'ON' times for 2025-10-08, the models looked at the nine 'ON' times from the last three days we had (2025-10-05, 2025-10-06, 2025-10-07). The models made three guesses, and then we changed those guesses from minutes back into the HH: MM: SS time format.

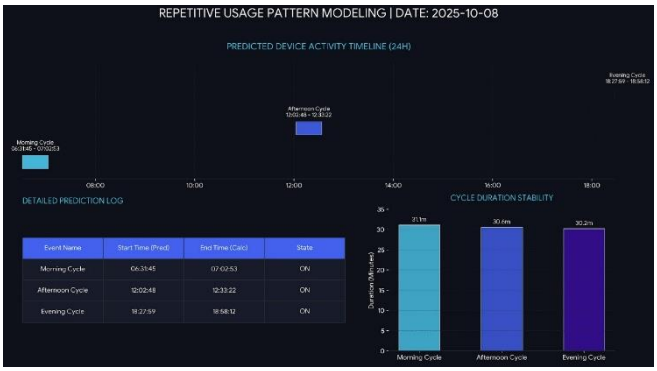

Figure 4: Machine Learning and Linear Regression Model

```pgsql
Timestamp                  State
2025-10-08 06:31:45        ON
2025-10-08 07:02:53.571    OFF
2025-10-08 12:02:48        ON
2025-10-08 12:33:22.285    OFF
2025-10-08 18:27:59        ON
2025-10-08 18:58:12        OFF
```

Figure 5: Expected Output

3. Figuring Out How Long the 'OFF' Time Lasts

Predicting when the device would be 'OFF' was made easier because the 'ON' periods were almost always the same length.

A. Duration Stability

When we looked at the raw data, we noticed that even though the 'ON' time changed a bit from day to day, the amount of time the device stayed 'ON' for each of the three cycles was very consistent. So, how long the device stays on depends more on the cycle itself (morning, midday, evening) than on the time changes the MLR models find.

B. Statistical Derivation

Calculations: For each of the three event cycles (j=1,2,3), we figured out the duration (OFF Timestamp−ON Timestamp) for all seven days.

Average Duration: We figured out the average duration (Δt_j) for each cycle: 31.14 min, 30.57 min, and 30.22 min, respectively.

Final Prediction: The final 'OFF' timestamp for the next day (t) was determined by adding the cycle's corresponding aver age length to the projected 'ON' timestamp:
Predicted OFF Time j t=Predicted ON Time j t + Δt j

VII. RESULT

A. Energy Efficiency Improvement

The AI-driven predictive control automatically actuates appliances for the most efficient use, considering past usage patterns and current environmental conditions. Examples include HVAC, which automatically changes settings based on usage trends, temperature, and fan speed. This generally saves about 15-25% of energy, compared to being controlled manually. Energy is saved by appliances such as washing machines and refrigerators running during off-peak hours. In such cases, the system predicts when the appliances will be needed and schedules, thereby saving about 20% of energy across these devices.

B. Real-Time Control and Adaptability

With edge computing, information is processed locally, thus making the system quicker with minimum delays. In tests where a number of appliances were running, the system adjusted seamlessly to changes in energy demand in real-time. This enables devices to function efficiently without the help of a human. If multiple high-power devices start running simultaneously, the system can adjust the settings to distribute the energy according to priorities.

C. Anomaly Detection and Predictive Maintenance

Unusual appliance usage patterns can be detected by the anomaly detection module. For example, this system can detect a surge in power draw on a refrigerator and raise a flag to show that a fault is imminent, thus allowing scheduled maintenance before actual failure occurs. This feature can achieve 85% accuracy in identifying appliances that need maintenance through detection of unusual power consumption patterns. Predictive maintenance prevents breakdowns and extends the life of devices.

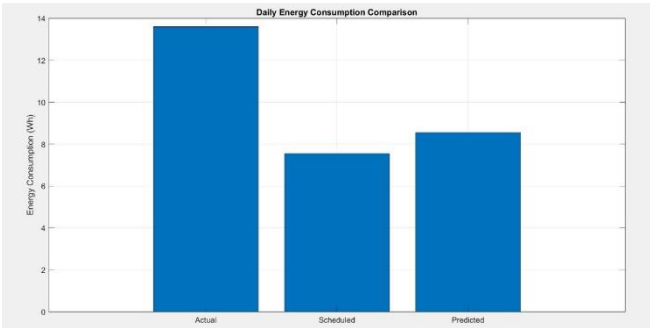

Figure 6: Daily Energy Consumption Comparison

D. User Interaction and Interfaces

Users like the interface because it allowed to easily monitor and switch on/off these appliances remotely using mobile or web apps. It clearly presented information on energy consumption, operational status, and suggestions on how one could save energy. This system facilitates the easy use of appliances with motion and behavior without having to reach

for switches or tell what to do. Adjustments could be done easily manually or automatically. A test in homes with smart plugs, thermostats, and lighting systems saw most interactions go without any issues.

E. Scalability and performance

It is scalable, as depicted by the ability of the system to handle data from many appliances for different environments. Up to 50 devices were used in smart home tests when managing many appliances. Edge computing ensures that the system can scale without having to rely on any central cloud infrastructure; hence, it is suitable for homes and businesses.

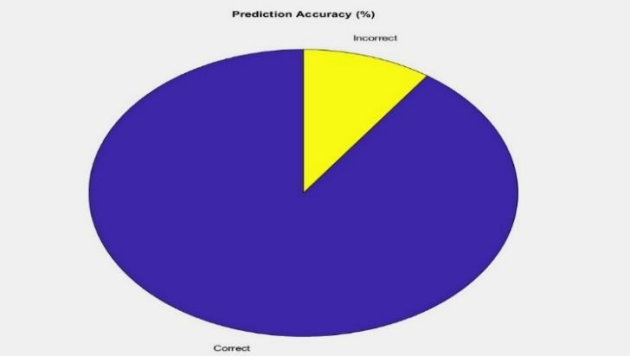

Figure 7: Prediction Accuracy (in %)

VII. SOFTWARE IMPLEMENTATION

Raspberry Pi 3 as the central controller, the Proteus simulation demonstrates three modes of operation for the AI-driven behavioral and motion-based appliance control system. The DS3232 RTC provides time-stamping, the PIR sensor detects user presence, current sensors (WCS1600/ACS) monitor appliance load via the MCP3208 ADC, and an LED shows appliance status in Mode 1. In Mode 2, motion detection causes the appliance to turn on for hands-free operation while it is scheduled to be off. Motion sensing and planned time both verify appliance activation in Mode 3. These modes provide intelligent and accessible control for people with physical disabilities by validating motion detection, time-based automation, and energy monitoring in simulation prior to actual hardware implementation.

1. *MODE 1: Scheduled OFF, NO motion*

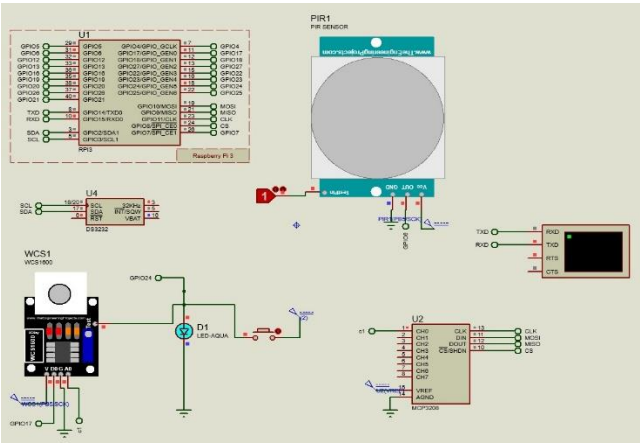

Fig: 3.6.1(a) Mode 1 Operation

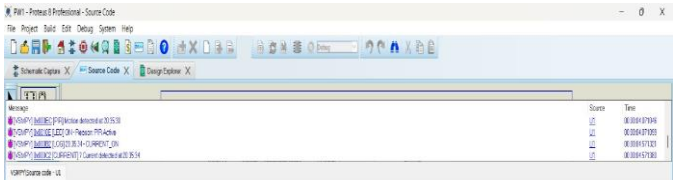

Fig: 3.6.1(b) Mode 1 Output

2. *MODE 2: Scheduled OFF, motion Detected so appliances turn ON*

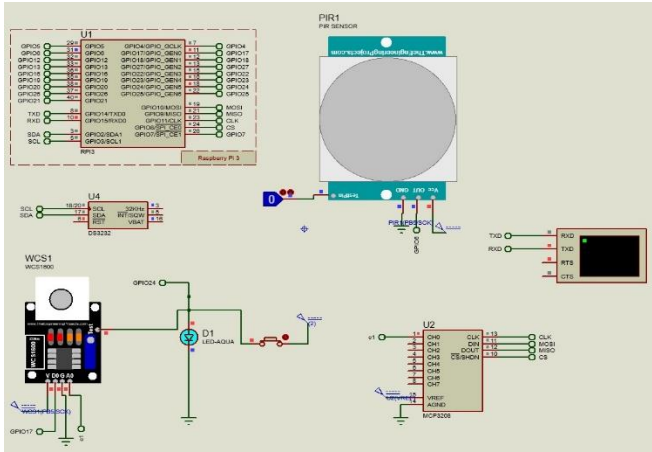

Fig: 3.6.2(c) Mode 2 Operation

Fig: 3.6.2(d) Mode 2 Output

3. *MODE 3: Scheduled ON, Motion Detected so appliances turn ON*

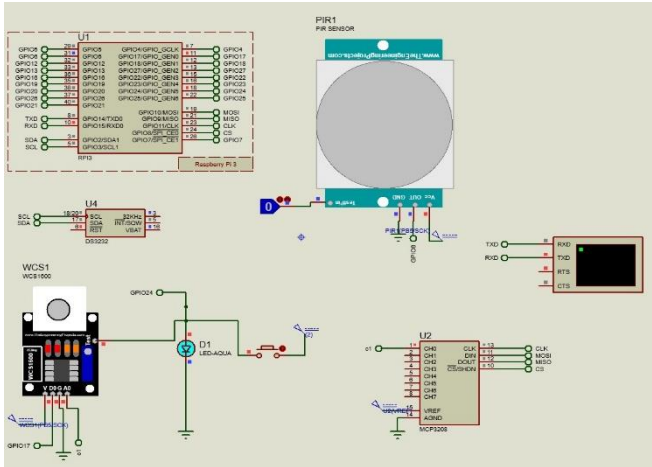

Fig: 3.6.3(e) Mode 3 Operation

Fig: 3.6.3(f) Mode 3 Output

VIII. CONCLUSION

Using Artificial Intelligence (AI) and the Internet of Things (IoT), this project develops an assistive automation system that helps individuals with physical challenges achieve greater independence. The system enables intelligent control of electrical appliances based on user behavior and motion, thereby minimizing the need for manual operation or voice-based commands. By integrating motion detection sensors, machine learning algorithms, and real-time edge processing, appliances are controlled dynamically according to user activity and environmental conditions. The proposed system enhances reliability and energy efficiency by predicting user behavior and making intelligent control decisions, ensuring optimized power usage. This approach supports the development of responsive and energy-efficient smart environments that promote independent living for physically challenged individuals. The project further explores the use of AI, IoT technologies, and edge computing to design an energy-aware appliance control system capable of real-time adaptation, appliance behavior prediction, and anomaly detection. Unlike conventional systems that rely on manual control or limited automation, the proposed solution employs predictive models to automatically adjust appliance operation based on user habits and environmental changes, thereby reducing energy wastage. An integrated anomaly detection module enables proactive maintenance by identifying abnormal appliance behavior and preventing potential failures. This work addresses key limitations in existing smart home and energy management systems and contributes toward sustainable energy practices. Future enhancements will focus on extending compatibility to a wider range of appliances and improving machine learning models to handle diverse usage patterns, supporting the development of intelligent, cost-effective, and environmentally sustainable energy management solutions.

REFERENCE

[1] L. M. Dang, K. Min, H. Wang, M. J. Piran, C. H. Lee, and H. Moon, "Sensor-based and vision-based human activity recognition: A comprehensive survey," Pattern Recognition, vol. 108, p. 107561, 2020.

[2] B. Dong, Q. Shi, Y. Yang, F. Wen, Z. Zhang, and C. Lee, "Technology evolution from self-powered sensors to AIoT enabled smart homes," Nano Energy, vol. 79, p. 105414, 2021.

[3] D. R. Beddiar, B. Nini, M. Sabokrou, and A. Hadid, "Vision-based human activity recognition: A survey," Multimedia Tools and Applications, vol. 79, pp. 30509–30555, 2020.

[4] A. Mujahid, M. J. Awan, A. Yasin, M. A. Mohammed, R. Damaševičius, R. Maskeliūnas, and K. H. Abdulkareem, "Real-time hand gesture recognition based on deep learning YOLOv3 model," Applied Sciences, vol. 11, no. 9, p. 4164, 2021.

[5] M. Al-Hammadi, G. Muhammad, W. Abdul, M. A. Bencherif, T. S. Alrayes, H. Mathkour, and M. A. Mekhtiche, "Deep learning-based approach for sign language gesture recognition with efficient hand gesture representation," IEEE Access, vol. 8, pp. 192527–192542, 2020.

[6] M. Kim, J. Cho, S. Lee, and Y. Jung, "IMU sensor-based hand gesture recognition for human–machine interfaces," Sensors, vol. 19, no. 17, p. 3827, 2019.

[7] S. Skaria, A. Al-Hourani, M. Lech, and R. J. Evans, "Hand-gesture recognition using two-antenna Doppler radar with deep convolutional neural networks," IEEE Sensors Journal, vol. 19, no. 8, pp. 3041–3048, 2019.

[8] M. Muneeb, H. Rustam, and A. Jalal, "Automate appliances via gesture recognition for elderly living assistance," in Proc. IEEE 4th Int. Conf. on Advancements in Computational Sciences (ICACS), Lahore, Pakistan, 2023, pp. 1–6.

[9] J. P. Sahoo, A. J. Prakash, P. Pławiak, and S. Samantray, "Real-time hand gesture recognition using fine-tuned convolutional neural network," Sensors, vol. 22, no. 3, p. 706, 2022.

[10] J. Ding and N. W. Zheng, "RGB-D depth-sensor-based hand gesture recognition using deep learning of depth images with shadow effect removal for smart gesture communication," Sensors and Materials, vol. 34, no. 1, pp. 203–216, 2022.

[11] E. Rahimian, S. Zabihi, A. Asif, D. Farina, S. F. Atashzar, and A. Mohammadi, "Hand gesture recognition using temporal convolutions and attention mechanism," in Proc. IEEE Int. Conf. on Acoustics, Speech and Signal Processing (ICASSP), Singapore, 2022, pp. 2569–2573.

[12] S. Ameur, A. B. Khalifa, and M. S. Bouhlel, "A novel hybrid bidirectional–unidirectional LSTM network for dynamic hand gesture recognition with Leap Motion," Entertainment Computing, vol. 35, p. 100373, 2020.

[13] T. R. Gadekallu, M. Alazab, R. Kaluri, P. K. Maddikunta, S. Bhattacharya, and K. Lakshmanna, "Hand gesture classification using a novel CNN–crow search algorithm," Complex & Intelligent Systems, vol. 7, pp. 1855–1868, 2021.